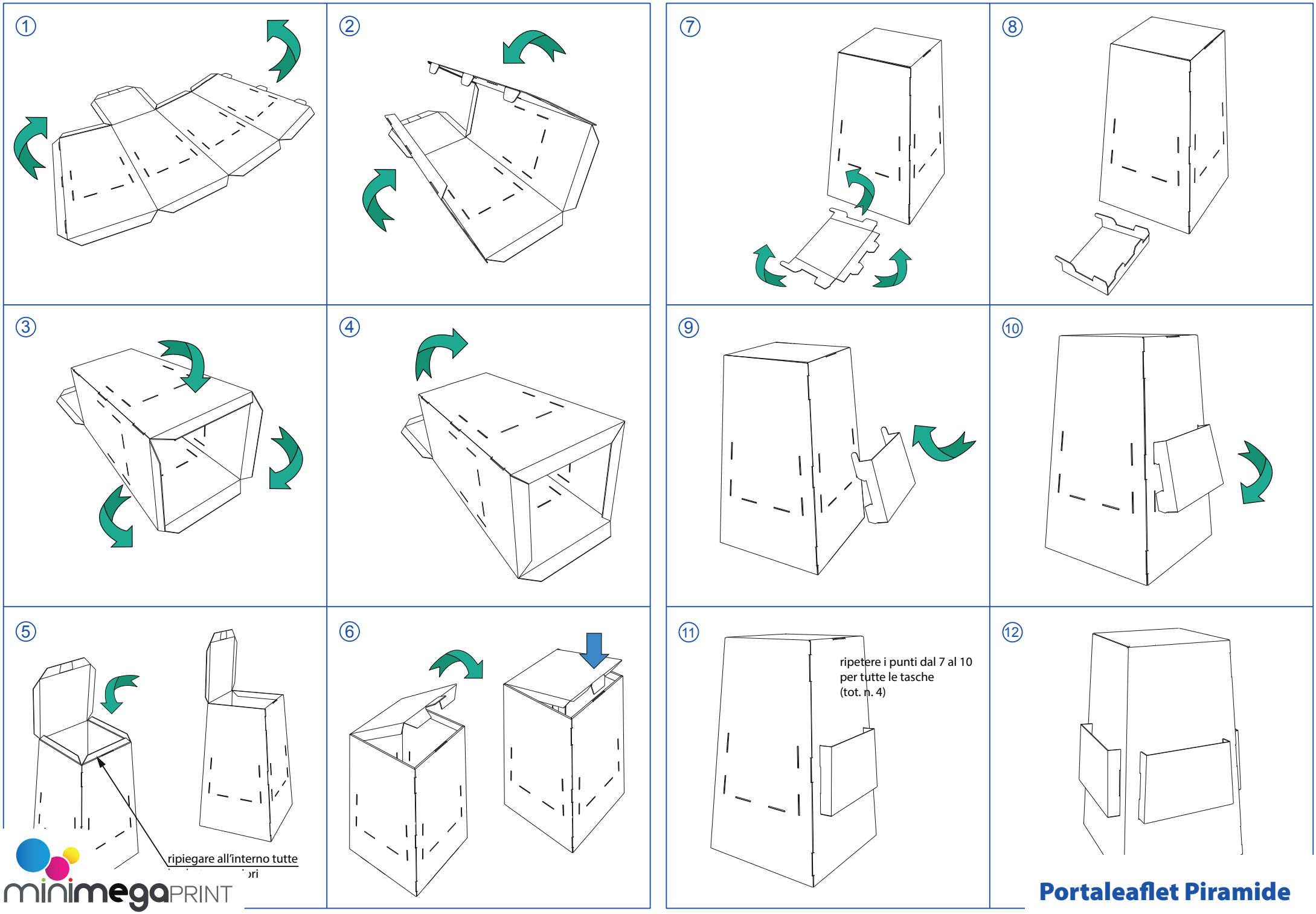

minimegaPRINT

Portaleaflet Piramide